Temperaturgivare för instick svetsat skyddsrör, form 2

Användningsområde

För temperaturmätning i gaser och vätskor i rör och tankar vid medelhögt tryck och medelhöga flöden. Monteras antingen med skjutbar fläns enligt DIN EN 50446 eller med gastät klämförskruvning. Se avsnitt "Tillbehör".

Armatur

Material syrafast stål / 1.4404 eller likvärdigt, Ø 9, 10, 11,12 mm.
Beroende på typ av material och diameter tillverkas vissa med anpassningshylsa i mätspetsen. För utförlig information om detta se "Teori"-avsnitt.

Mätinsats

Bytbar mätinsats av syrafast stål D = Ø6 mm. Insatslängden = L + 10 mm.
För utförlig information om mätinsatsen se TR/TC 100.

Godkännande

Givaren finns med ATEX-godkännande men med vissa begränsningar i beställningalternativen. För mer information se hemsidan.

Processtemperatur

TRA	-196...+600 °C
TCA	-40...+600 °C*

Kapslingsklass

Se avsnitt Kopplingshuvuden på sida 120.

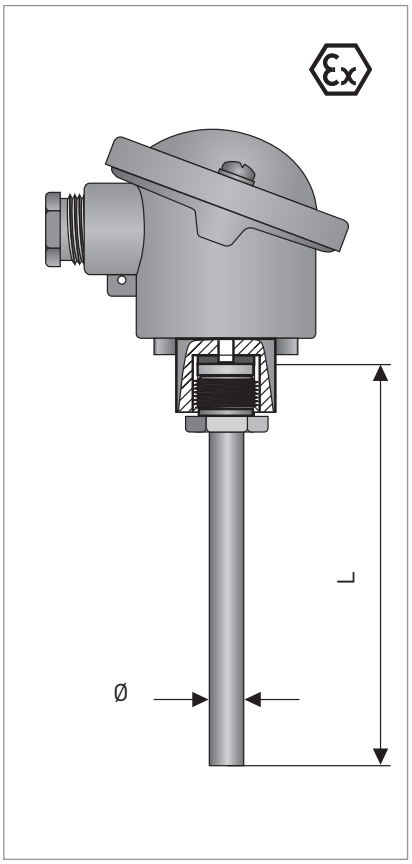

Dimensioner i mm

För mer detaljerade dimensioner se kapitel "Dimensioner för insticksgivare" på sida 149.

Svarstider

Typ	Vatten 0.4 m/s	
	t 0.5	t 0.9
TRA-P10, Ø 9	17 s	52 s
TRA-P10, Ø 11	21 s	58 s
TRA-P10, Ø 12	22 s	66 s
TCA-P10, Ø 9	14 s	42 s
TCA-P10, Ø 11	17 s	46 s
TCA-P10, Ø 12	18 s	54 s

Beställningskod för TRA-P10 med standardinställningar

V	T	S	1	4	1	0	1	3	2	1	3	0	0	4	0	1	0	0	0	0	0	0	0	0	1	0	0
					1						7	8															

Detta är ett urval av de valmöjligheter som finns för denna givare. För komplett beställningskod se sidan 18.

1. TYP		
1	Motståndsgivare	TRA-P10
A	Termoelement	TCA-P10

7. DIAMETER SKYDDSFICKA (Ø)	
1	9 mm
2	10 mm
3	11 mm
4	12 mm
5	15 mm

8. PROCESSANSLUTNING		
0	Utan	
P	Klämförskruvning G 1/2	(SS)
R	Klämförskruvning G 3/4	(SS)
S	Klämförskruvning 1/2" NPT	(SS)
U	Klämförskruvning G 1/2	(PTFE)
V	Klämförskruvning G 3/4	(PTFE)
N	Klämförskruvning G 1	(SS)

* Skjutbar fläns 4Z21 enbart för Ø 15 mm

* Temperaturspannet kan utökas med annat material i skyddsröret

VTS1 4

1. Type

	Plug-in			Screw-in			Flanged		
1	TRA-P 10	(Form 2)	[Ex]	2	TRA-S 11	(Form 8)	[Ex]	4	TRA-F 13	(Form 2F)	[Ex]
5	TRA-P 20	reduced tip		3*	TRA-S 12	(Form 2G)	[Ex]	8	TRA-F 23	reduced tip	
A	TCA-P 10	(Form 2)	[Ex]	6	TRA-S 21	reduced tip		D	TCA-F 13	(Form 2F)	[Ex]
E	TCA-P 20	reduced tip		7	TRA-S 22	reduced tip		H	TCA-F 23	reduced tip	
				B	TCA-S 11	(Form 8)	[Ex]				
TRA	RTD temperature assembly			C	TCA-S 12	(Form 2G)	[Ex]		Without protection tube		
TCA	TC temperature assembly			F	TCA-S 21	reduced tip		L	TRA-P 14	Ø 6mm Insert	[Ex]
				G	TCA-S 22	reduced tip		T	TCA-P 14	Ø 6mm Insert	[Ex]

2. Certificate

0	without	1	ATEX Ex ia	4	IECEx Ex ia			

3. Connection heads

Aluminium M20x1,5				Stainless steel M20x1,5				Polyamide M20x1,5			
1	BA	screw cover, IP65		8	BVA	screw cover, IP65		B	BUZ-HK	hinged cover, IP54	[Ex]
2	BUZ-S	hinged cover, snap, IP65		C	SXD	screw cover, IP68	[Ex]	7	BBK	screw cover, IP54	
3	BUZ-T	hinged cover, screw, IP65	[Ex]	M	BHY	screw cover, M16x1,5,IP67					
4	BGK	screw cover, IP65		R	SXD-W*	screw cover+Indicator, IP68	[Ex]				
5	BUZ-H	hinged cover, IP65	[Ex]								
6	BUZ-HW*	with indicator, IP65									
A	AXD	screw cover, IP68	[Ex]								
P	AXD-W*	screw cover+Indicator, IP68	[Ex]								

** indicator 4-digit loop powered LCD with floating zero*

4. Measuring insert = sensor / wiring

2	1x Pt100	3-wire	[Ex]	8	1x Pt100	3-wire + Smart Sense		A	1x	Thermocouple Type J (Fe-CuNi)	[Ex]
3	1x Pt100	4-wire	[Ex]					B	1x	Thermocouple Type K (NiCr-Ni)	[Ex]
4	2x Pt100	3-wire	(Cl.A, WW) [Ex]					D	2x	Thermocouple Type J (Fe-CuNi)	[Ex]
5	2x Pt100	4-wire	(Cl.A, WW) [Ex]					E	2x	Thermocouple Type K (NiCr-Ni)	[Ex]

5. Measuring insert / tolerance class

Mineral insulated thin film			Mineral insulated wire wound			Mineral insulated thermocouple	
1	Cl. B	(-50…+500°C)	4	Cl. A	(-100 ... +450°C)	A	Cl.1
2	Cl. A	(-30 ... +300°C)	6	Cl. B	(-200… +600°C		
3	Cl. A, vibration-proof	(-20 ... +200°C)	5	Cl. AA	(-50… +250°C)		
			7	1/10 DIN B	(0°C)		
			P	Matched pair cl. A			

6. Protection tube material

0	without			
1	1.4571	316Ti	(Ø 9, 11, 12 mm;	up to + 600°C)
3	1.4404	316L	(Ø 10, 12, 15, mm;	up to + 600°C)

7. Protection tube diameter

0	without		3	11 mm	1.4571	5	15 mm	1.4404
1	9 mm	1.4571 (not reduced tip)	4	12 mm	1.4571 / 1.4404	P	14 mm	PTFE / 1.4571 / 1.4404
2	10 mm	1.4404 (not reduced tip)						

8. Process connection

		Flanged		Compression fittings	
0	without	B	Flange DN25, EN1092-1	P	Compression fitting G 1/2, SS
	Threaded	C	Flange DN40, EN1092-1	R	Compression fitting G 3/4, SS
1	G 1/2 A	D	Flange DN50, EN1092-1	N	Compression fitting G 1, SS
2	G 3/4 A	H	Flange 1", ASME B16.5	S	Compression fitting 1/2" NPT, SS
3	G 1 A	L	Flange 1,5", ASME B16.5	U	Compression fitting G 1/2, PTDE
5	1/2" NPT	X	Sliding flange UZ21 for Ø5 tube	V	Compression fitting G 3/4, PTFE
6	3/4" NPT				
7	1" NPT				

9. Pressure rating

0	without		A	150 lbs RF	B16.5
1	PN 40 Form B1		B	300 lbs RF	B16.5

10. Immersion length thermowell (L)

0	without	5	170 mm	A	305 mm	R	450 mm
1	75 mm	M	200 mm	B	315 mm	F	465 mm
2	100 mm	6	225 mm	P	350 mm	G	480 mm
3	115 mm	7	250 mm	C	390 mm	S	500 mm
L	150 mm	8	270 mm	D	395 mm	H	545 mm
4	160 mm	N	300 mm	E	400 mm	K	725 mm
						Z	customised length (55…6000 mm)

11. Extension tube length (HL)

0	without		H	150 mm		L	170 mm
1	80 mm	(standard length for flange)	K	160 mm		M	180 mm
3	145 mm	(standard length for thread	D	110 mm		N	190 mm
A	70 mm		E	120 mm		P	200 mm
B	90 mm		F	130 mm		Z	customised length (min 55…400 mm)
C	100 mm		G	140 mm			

12. Type of connection / head mounted transmitter

0	with flying leads for transmitter mounting			
1	Standard version with ceramic terminal block			
L	with head mounted transmitter	// APAQ C130	Basic RTD/TC	
4	with head mounted transmitter	// IPAQ C202	Basic RTD	[Ex]
C	with head mounted transmitter	// IPAQ C330	Universal	[Ex]
E	with head mounted transmitter	// IPAQ C520	Smart, HART, SIL2	[Ex]
M	with head mounted transmitter	// IPAQ C530	Smart, HART	[Ex]

13. Type of connection / rail mounted transmitter

0	without			
L	with rail mounted transmitter	// APAQ R130	Basic RTD/TC	
A	with rail mounted transmitter	// IPAQ-4L	Universal, 90 - 250 VAC	
B	with rail mounted transmitter	// IPAQ-4L	Universal, 20 - 30 VDC	
C	with rail mounted transmitter	// IPAQ R330	Universal	[Ex]
H	with rail mounted transmitter	// IPAQ R520	Smart, HART / SIL2	[Ex]
M	with rail mounted transmitter	// IPAQ R530	Smart, HART	[Ex]

14. Measuring range

		Measuring range		Measuring range		Measuring range	
0	without	4	-50 …+150°C	8	0…+200°C	D	0… +400°C
1	customised *	5	0 … +50°C	A	0…+250°C	E	0… +450°C
2	-50 … +50°C	6	0…+100°C	B	0…+300°C	F	0… +500°C
3	-50 …+100°C	7	0…+150°C	C	0…+350°C	G	0… +600°C

Vissa kombinationer är inte möjliga. Vänligen kontakta KROHNE Inor för ytterligare information.

KOMPLETT BESTÄLLNINGSNYCKEL 1

VTS1	4																										

15. Calibration report

0*	without		
	Sensor calibration		
1	1-point	(single)	room temperature
P	2-point	(single)	0°, 100°C
R	2-point	(double)	0°, 100°C
2	2-point	(single)	0%, 100% of range
3	2-point	(double)	0%, 100% of range
S	3-point	(single)	0°, 50°, 100°C
T	3-point	(double)	0°, 50°, 100°C
4	3-point	(single)	0%, 50%, 100% of range
5	3-point	(double)	0%, 50%, 100% of range
6	customised (single)		
7	customised (double)		
	Sensor + Transmitter calibration		
A	2-point	(single)	0%, 100% of range
B	3-point	(single)	0%, 50%, 100% of range
C	5-point	(single)	0%, 25%, …, 100% of range
	Sensor + Transmitter calibration with error correction		
E	2-point	(single)	0%, 100% of range
F	3-point	(single)	0%, 50%, 100% of range
G	5-point	(single)	0%, 25%, …, 100% of range
H	customised		

16. Declaration of compliance

0	without
1	Declaration of compliance with order, 2.1 according to EN 10204

17. Pressure test wetted parts

0	without
1	Pressure test with test report 2.2 EN 10204
2	Pressure test with inspection certificate 3.1 EN 10204

18. Material inspection certification on wetted parts

0	without
1	Material certificate 3.1 according to EN 10204
2	PMI test metall. pressurized wetted parts, certificate 3.1
4	Material & PMI test certificate 3.1 according to EN 10204

19. Marking

0	without	
1	Stainless steel tag plate	(40 x 20 mm)
2	Stainless steel tag plate	(120 x 46 mm)
6	PVF- tag plate	(45 x 15 mm)

22. Version

0	without
1	SIL2, EU- Manufacturer's declaration [IPAQ 520]

25.Electrical Connection

0	Without
2	M12 socket, 4-pole
B	M20x1,5, PA, Ø6-12,Ex
C	M20x1,5, Br., Ø6-12,Ex

VTS1	4																				1		0	0		**Order code**

Exempel konfigurering
VTS140122341043L0600000001000

Temperatur givare med gängad process anslutning

Ø6 mm Pt100 insats 3-tråds, klass A tunnfilm teknik
G1/2 process anslutning
Ø12 mm skyddsrör i 1.4404 material
Insticksläng L= 160 mm och 145 mm halsrör

Kopplings huvud med lock i Aluminium och M20 kabel förskruvning
APAQ C130 transmitter konfigurerad till 0…100°C

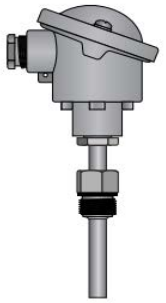

Accessories

Ordercode	Description	L (mm)
68SVS10505	Weld-in sleeve Ø 40 mm, Thread G1/2, 1.4404	50
68SVS11005	Weld-in sleeve Ø 40 mm, Thread G1/2, 1.4404	100

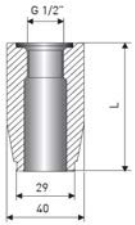

Vissa kombinationer är inte möjliga. Vänligen kontakta KROHNE Inor för ytterligare information.